| | |
|---|---|
| **Ettevõtte nimi:** | AKVEDUKT OÜ |
| **Koostas:** | - |
| **Telefon:** | - |
| **Faks:** | - |
| **Kuupäev:** | - |

| Positsioon | Kogus | Kirjeldus |
|---|---|---|
| | 1 | **MAGNA1 40-80 F** |

**Märkus! Reaalse toote väljanägemine võib erineda pildil kujutatust.**

Toote kood:: 97924176

MAGNA1 circulator pump with easy selection of pump setting
The pump is of the canned-rotor type, i.e. pump and motor form an integral unit without shaft seal and with only two gaskets for sealing.
The bearings are lubricated by the pumped liquid.
In order to avoid problems in connection with disposal, great importance has been attached to using as few different materials as possible.
A pump with no maintenance requirements and extremely low life cycle cost.

Heating systems
• Main pump
• mixing loops
• heating surfaces
• air-conditioning surfaces.
The MAGNA1 circulator pumps are designed for circulating liquids in heating systems with variable flows where it is desirable to optimise the setting of the pump duty point, thus reducing energy costs. The pumps are also suitable for domestic hot-water systems.
To ensure correct operation, it is important that the sizing range of the system falls within the duty range of the pump.

Benefits
• Safe selection.
• Simple installation.
• Low energy consumption. All MAGNA1 pumps comply with the EuP requirements.
• Nine light fields for indication of pump setting. Three proportional-pressure curves, three constant-pressure curves and three fixed-speed curves are available.
• Low noise level.
• No mainteance and long life.

**Vedelik:**

| | |
|---|---|
| Pumbatav vedelik: | Vesi |
| Vedeliku temperatuurivahemik: | -10 .. 110 °C |
| Vedeliku temp.: | 20 °C |
| Tihedus: | 998.2 kg/m³ |

**Tehnilised:**

| | |
|---|---|
| TF klass: | 110 |

| Positsioon | Kogus | Kirjeldus |
|---|---|---|
| | | Tunnustused sildikul: CE,VDE,EAC |
| | | **Materjalid:** |
| | | Pumbapesa: Valumalm<br>EN-GJL-250<br>ASTM A48-250B |
| | | Tööratas: PES 30%GF |
| | | **Paigaldamine:** |
| | | Ümbritseva temperat. vahemik: 0 .. 40 °C |
| | | Maks. töösurve: 10 bar |
| | | Ääriku standard: DIN |
| | | Toruühendus: DN 40 |
| | | Surveklass: PN6/10 |
| | | Paigalduspikkus: 220 mm |
| | | **Elektriandmed:** |
| | | Power input - P1: 17.03 .. 267 W |
| | | Maksimaalne voolutarve: 0.19 .. 1.18 A |
| | | Vooluvõrgu sagedus: 50 Hz |
| | | Nimipinge: 1 x 230 V |
| | | Kaitseklass (IEC 34-5): X4D |
| | | Isolatsiooniklass (IEC 85): F |
| | | **Muu:** |
| | | Label: Grundfos Blueflux |
| | | Energy (EEI): 0.23 |
| | | Nettokaal: 16.5 kg |
| | | Bruttokaal: 18.2 kg |
| | | Tarnemaht: 0.04 m³ |

| | |
|---|---|
| **Ettevõtte nimi:** | AKVEDUKT OÜ |
| **Koostas:** | - |
| **Telefon:** | - |
| **Faks:** | - |
| **Kuupäev:** | - |

## 97924176 MAGNA1 40-80 F 50 Hz

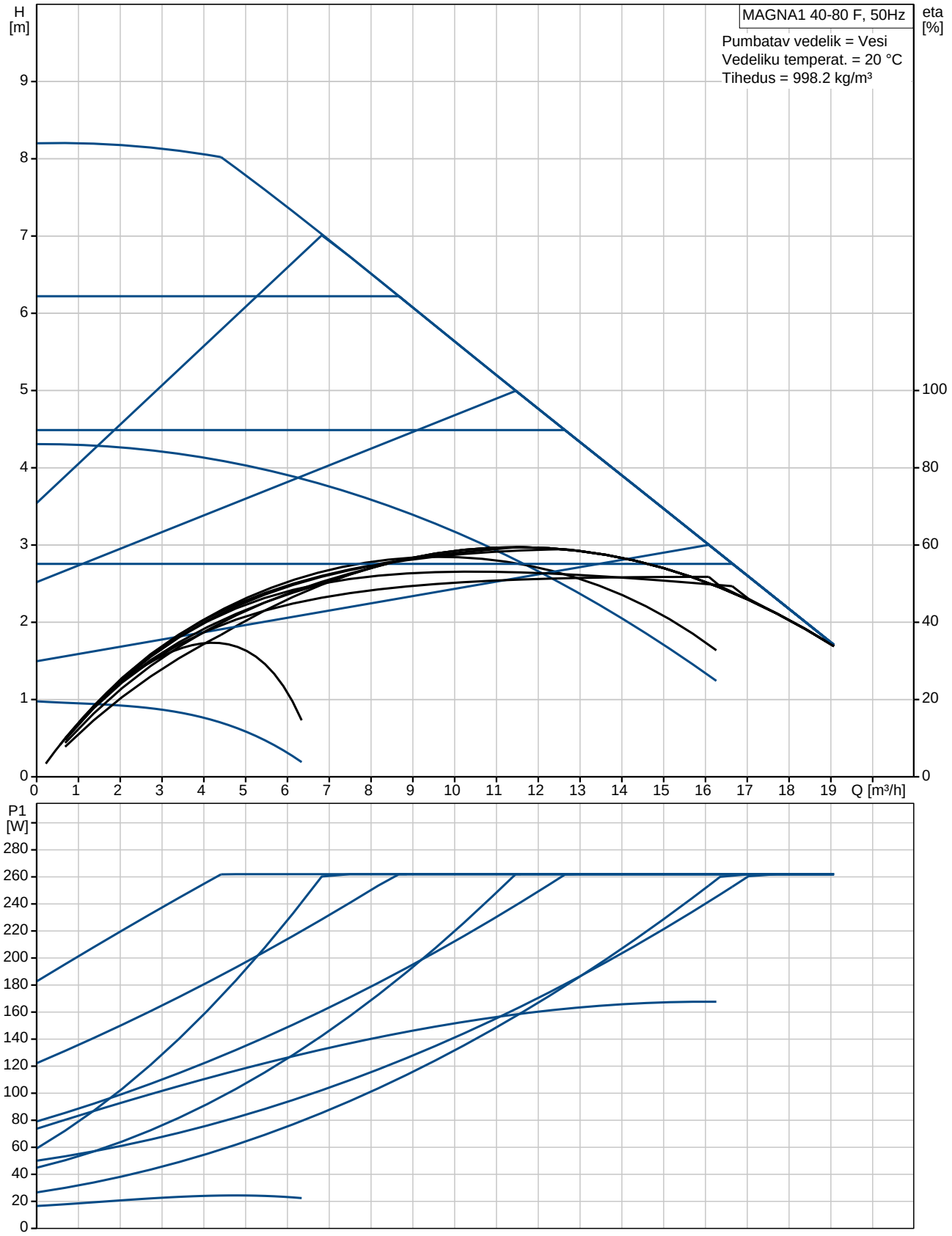

**Ettevõtte nimi:** AKVEDUKT OÜ
**Koostas:** -
**Telefon:** -
**Faks:** -
**Kuupäev:** -

| Kirjeldus | Väärtus |
|---|---|
| Product name: | MAGNA1 40-80 F |
| Product No: | 97924176 |
| EAN number: | 5710626492503 |
| Hind: | Nõudmisel |
| **Tehnilised:** | |
| Tõstekõrgus maks.: | 80 dm |
| TF klass: | 110 |
| Tunnustused sildikul: | CE,VDE,EAC |
| Mudel: | A |
| **Materjalid:** | |
| Pumbapesa: | Valumalm |
| | EN-GJL-250 |
| | ASTM A48-250B |
| Tööratas: | PES 30%GF |
| **Paigaldamine:** | |
| Ümbritseva temperat. vahemik: | 0 .. 40 °C |
| Maks. töösurve: | 10 bar |
| Ääriku standard: | DIN |
| Toruühendus: | DN 40 |
| Surveklass: | PN6/10 |
| Paigalduspikkus: | 220 mm |
| **Vedelik:** | |
| Pumbatav vedelik: | Vesi |
| Vedeliku temperatuurivahemik: | -10 .. 110 °C |
| Vedeliku temp.: | 20 °C |
| Tihedus: | 998.2 kg/m³ |
| **Elektriandmed:** | |
| Power input - P1: | 17.03 .. 267 W |
| Maksimaalne voolutarve: | 0.19 .. 1.18 A |
| Vooluvõrgu sagedus: | 50 Hz |
| Nimipinge: | 1 x 230 V |
| Kaitseklass (IEC 34-5): | X4D |
| Isolatsiooniklass (IEC 85): | F |
| **Muu:** | |
| Label: | Grundfos Blueflux |
| Energy (EEI): | 0.23 |
| Nettokaal: | 16.5 kg |
| Bruttokaal: | 18.2 kg |
| Tarnemaht: | 0.04 m³ |

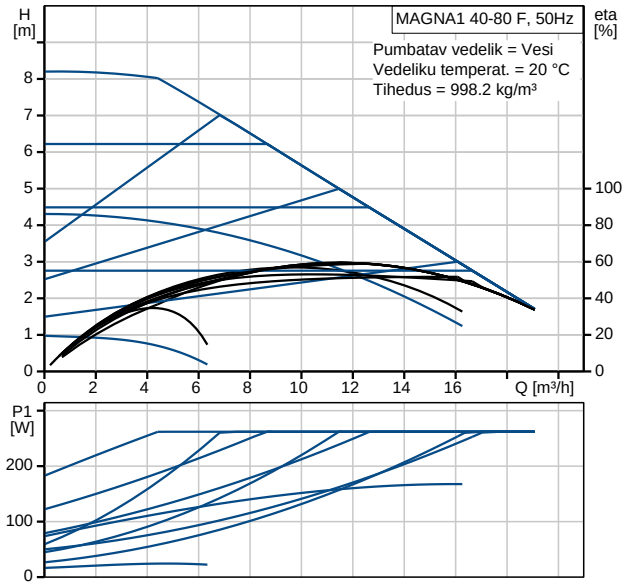


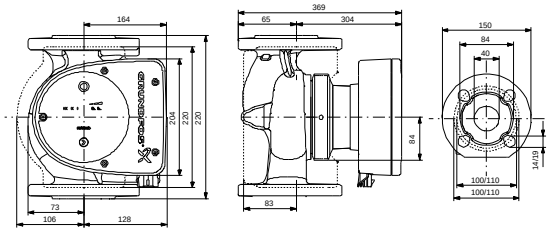

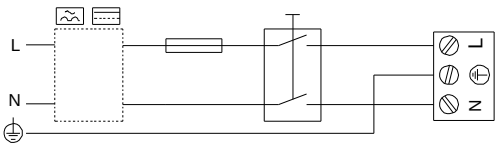

| | |
|---|---|
| **Ettevõtte nimi:** | AKVEDUKT OÜ |
| **Koostas:** | - |
| **Telefon:** | - |
| **Faks:** | - |
| **Kuupäev:** | - |

## 97924176 MAGNA1 40-80 F 50 Hz

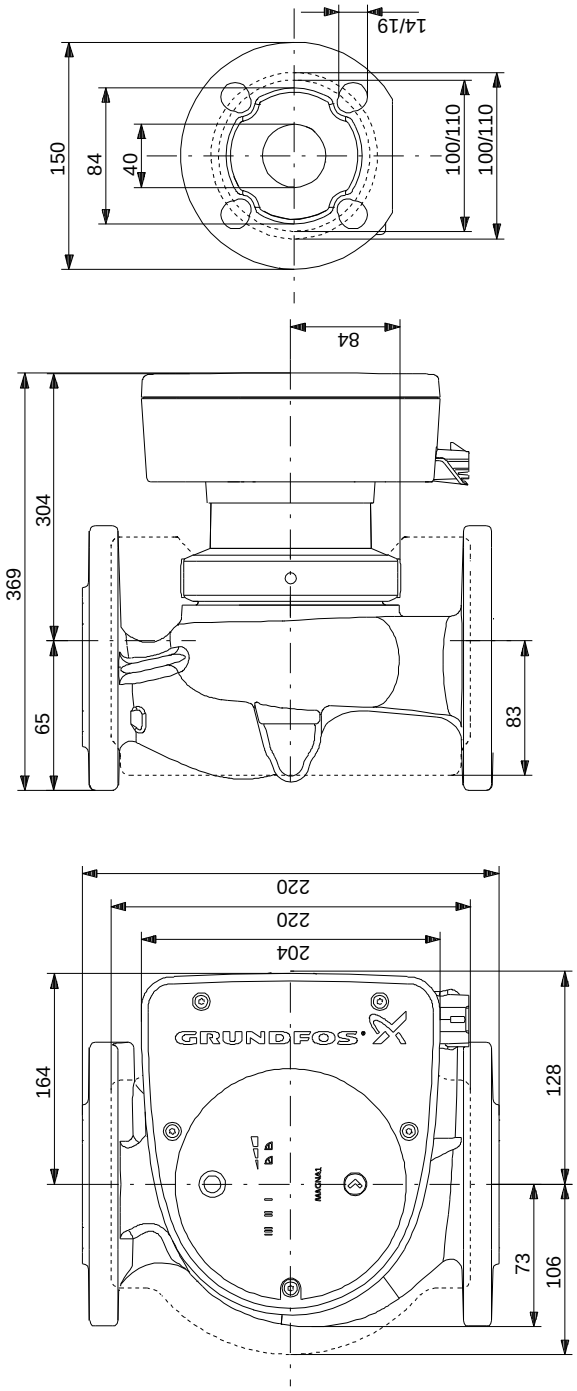


Note! All units are in [mm] unless others are stated.
Disclaimer: This simplified dimensional drawing does not show all details.